TEMPERATURE COMPENSATED CRYSTAL OSCILLATOR
温补晶振 TCXO

温度补偿晶体振荡器是一种高精度晶体振荡器，在一定的温度范围内通过补偿方式而保持晶体振荡器的输出频率在一定的精度范围内的晶体振荡器，适用于各种高精度导航定位、射频通信等时钟电路部分，通过高精度，高稳定性时钟产品解决卫星通信中时钟同步，以及降低射频信道的误码率。

Temperature Compensated Crystal Oscillator (TCXO) is a high-precision crystal oscillator. Within a certain temperature range, it maintains the output frequency within accurate limits through temperature compensation technology. It is widely applied to clock circuits for high-precision navigation positioning and radio frequency communication. Featuring high precision and superior stability, it realizes accurate clock synchronization in satellite communication and effectively reduces the bit error rate of RF channels.

典型应用 Typical Applications

智能终端
Smart terminals

5G小基站
5G small cells

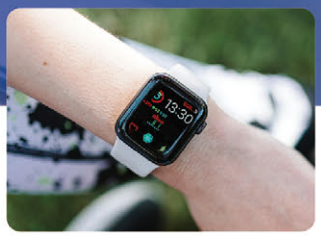

智能手表
Smart watches

导航定位
Navigation positioning

产品系列概览 Product Lineup

类型 category	封装系列 Package Series	外观尺寸/长x宽(mm) Overall Dimensions Length × Width (mm)	频率范围 FREQ. RANGE	频率稳定度 Frequency stability	工作温度 Operating Temperature	电压/输出方式 Voltage/Output Type	产品特点 Product Features
通用TCXO Standard Series	TC-1612/2016/2520/3225	1.6x1.2/2.0x1.6/2.5x2.0/3.2x2.5	9.5~70MHz	±2.5ppm	-40~+85℃	1.68~3.63V Clipped sine wave	温区-40~85℃，实现小尺寸1612，可VCTCXO Operating temperature range: -40℃ to 85℃, achieves small size 1612, supports VCTCXO
CMOS TCXO CMOS TCXO	TC-2016HC/2520HC/3225HC	2.0x1.6/2.5x2.0/3.2x2.5	8~52MHz	±2.5ppm	-40~+105℃	1.68~3.63V CMOS	可实现CMOS输出、宽温补偿能力 Achieves CMOS output and wide-temperature compensation capability
宽温 TCXO Wide-temperature	TC-1612WT/2016WT/2520WT/3225WT	1.6x1.2/2.0x1.6/2.5x2.0/3.2x2.5	8~52MHz	±0.5ppm	-40~+105℃	1.68~3.63V Clipped sine wave	宽温区-40~105℃/±0.5ppm Clipped sine wave, wide-temperature range -40~105℃/±0.5ppm
高精度 TCXO High-precision	TC-3225HP/5032HP/7050HP	3.2x2.5/5.0x3.2/7.0x5.0	10~52MHz	±0.28~±0.1ppm	-40~+105℃	2.3~3.63V Clipped sine wave 2.3~3.63V, CMOS	超高精度，-40~85℃/±0.1ppm -40~105℃/±0.2ppm Ultra-high precision -40~85℃/±0.1ppm, -40~105℃/±0.2ppm
低电压 TCXO Low-voltage	TC-1612LV/2016LV/2520LV/3225LV	1.6x1.2/2.0x1.6/2.5x2.0/3.2x2.5	13~52MHz	±0.5ppm	-40~+105℃	1.1~2.0V Clipped sine wave	实现小尺寸1612，低电压，低耗能 achieving a small size of 1612, low voltage, and low energy consumption
低相噪 TCXO Low Phase Noise	TC-1612LN/2016LN/2520LN/3225LN	1.6x1.2/2.0x1.6/2.5x2.0/3.2x2.5	13~104MHz	±0.5ppm	-40~+105℃	1.68~3.63V Clipped sine wave	低相噪、-40~85℃/±0.5ppm -40~105℃/±2.5ppm Low phase noise, -40~85℃/±0.5ppm, -40~105℃/±2.5ppm
高频 TCXO High-frequency	TC-2016HF/2520HF/3225HF	2.0x1.6/2.5x2.0/3.2x2.5	60~160MHz	±0.5ppm	-40~+125℃	1.68-3.63V CMOS	可实现高频点补偿，-40~125℃/±10ppm Can achieve high-frequency point compensation, -40~125 ℃/± 10ppm
晶核 TCXO All Quartz	TC-2016JH	2.0x1.6	26MHz/52MHz	±0.5ppm	-40~+85℃	1.8V/2.6V/2.8V/3.0V/3.3V Clipped sine wave	超小尺寸，低相噪，长期可靠性高（两重封装，老化性能优） Ultra-small size, Low phase noise, long-term high reliability (double packaging, excellent aging performance)

TC-LV 低电压 TCXO Low-voltage

TC-1612LV/TC-2016LV/TC-2520LV/TC-3225LV

温补晶体振荡器 Temperature Compensated Crystal Oscillator

产品分类 Product Classification

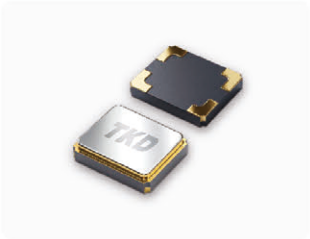
TC-1612LV

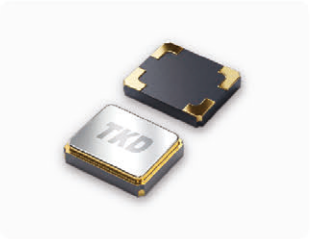
TC-2016LV

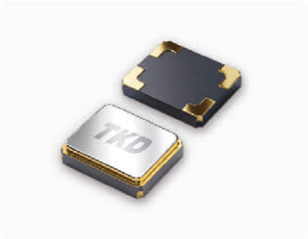
TC-2520LV

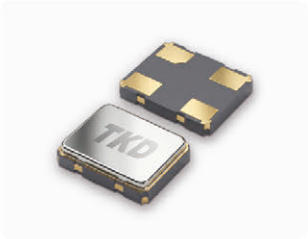
TC-3225LV

产品特点及应用 Features and Typical Applications

- 外形尺寸：TC-1612LV:1.6x1.2x0.65mm、TC-2016LV:2.0x1.6x0.8mm、TC-2520LV:2.5x2.0x0.85mm、TC-3225LV:3.2x2.5x0.9mm
- H架构、体积小、 重量轻、 功耗低，覆盖输出频率宽(13MHz到52MHz)，可广泛应用于消费电子设备和仪器中

- Dimensions: TC-1612LV: 1.6×1.2×0.65mm, TC-2016LV: 2.0×1.6×0.8mm, TC-2520LV: 2.5×2.0×0.85mm, TC-3225LV: 3.2×2.5×0.9mm
- Featuring H-structure, compact size, light weight and low power consumption, it supports a wide output frequency range from 13MHz to 52MHz, extensively applied in consumer electronics and instruments.

技术指标 Technical Specifications		1.2V Min.	1.2V Max.	unit.
工作电压(VDD) Operating Voltage (VDD)		1.14	2.0	V
输出频率 Output Frequency		13	52	MHz
标称频率 Nominal Frequency		13~52		MHz
频率精确度(25℃) Frequency Accuracy(25℃)		-	±2	ppm
频率稳定度 Frequency Stability	Vs电源电压(±5%) Vs Supply Voltage(±5%)	±0.1	±0.2	ppm
	Vs 负载(±10%) Vs Load(±10%)	±0.1	±0.2	ppm
	Vs 老化率(@第一年) Vs Aging Rate (@First Year)	-	±1	ppm
工作电流 Operating Current	26MHz≤F_0≤52MHz	-	2	mA
输出电平 clipped sine wave		0.8	-	Vp-p
负载 Load		10kΩ//10pF		
压控输入阻抗(VCTCXO) Voltage Control Input Impedance		500	-	kΩ
相位噪声@19.2MHz Phase Noise @19.2MHz	100Hz	-108		dBc/Hz
	1kHz	-130		dBc/Hz
	10kHz	-145		dBc/Hz
启动时间 Start-up Time		-	2	msec
存储温度 Storage Temperature		-55	125	℃

*标准频率是指晶体设计的频率，并不表示存货状况。
回流焊后1小时，在25℃条件下测量的频率。

频率稳定度vs. 温度范围

Temp.(℃) \ ppm	±0.5	±1.0	±1.5	±2.0	±2.5
-20~+70	○	○	○	○	○
-30~+85	○	○	○	○	○
-40~+85	○	○	○	○	○

* ○: 可提供 △: 有条件下提供 ×: 不可提供
注意：并非所有选项组合都可提供。 其他规格可根据要求提供。
规格如有更改，恕不另行通知。

TC/TC-HC/TC-WT/TC-HP/TC-LV/ TC-LN/TC-HF

外形尺寸 Outline Dimensions

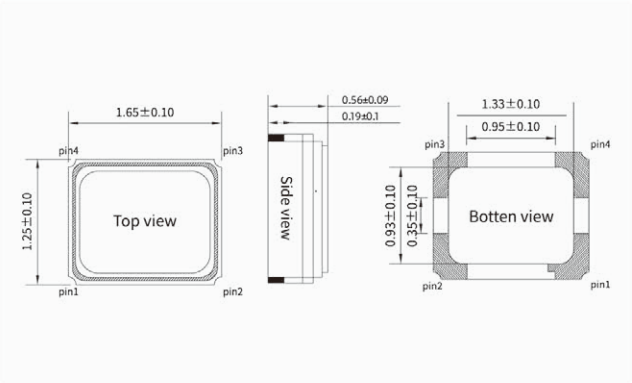

TC-1612/TC-1612WT/TC-1612LN/TC-1612LV

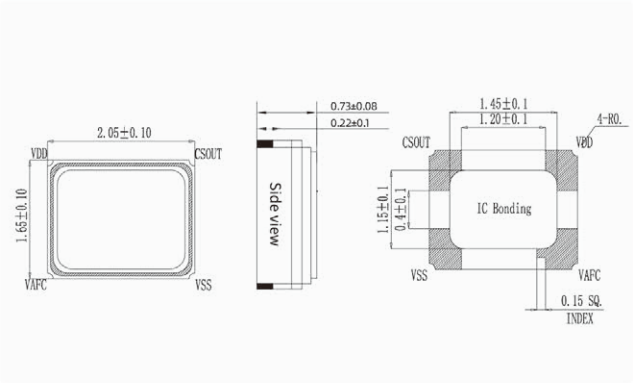

TC-2016/TC-2016HC/TC-2016WT/
TC-2016LV/TC-2016LN/TC-2016HF

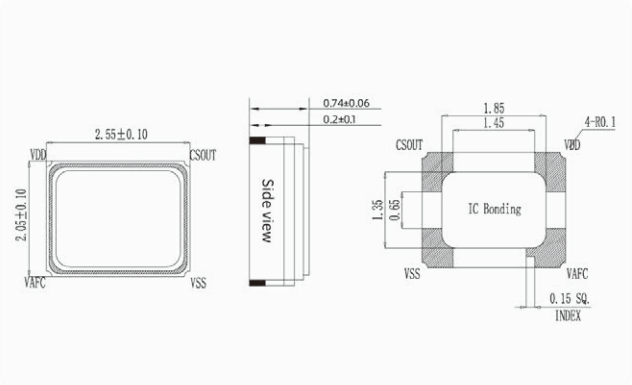

TC-2520/TC-2520HC/TC-2520WT/
TC-2520LV/TC-2520LN/TC-2520HF

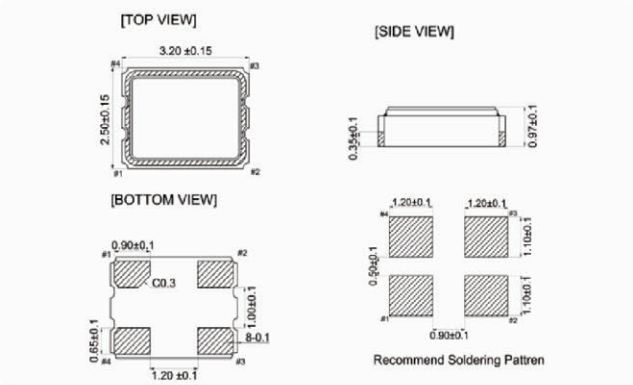

TC-3225/TC-3225HC/TC-3225WT/TC-3225HP
TC-3225LV/TC-3225LN/TC-3225HF

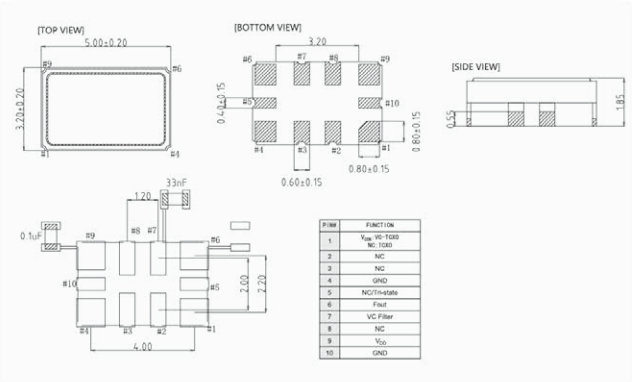

TC-5032HP

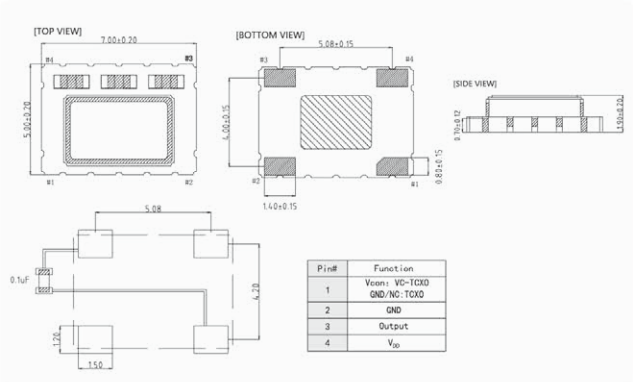

TC-7050HP